VIDIMAUNO

Vidima®

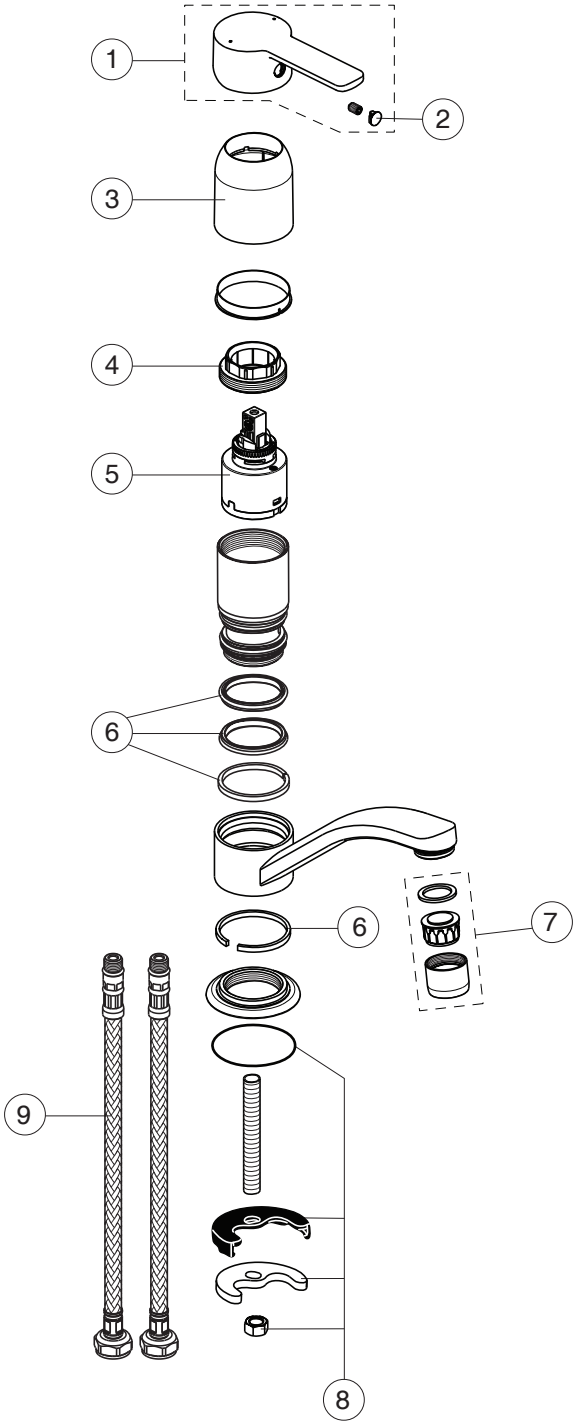

B1057AA

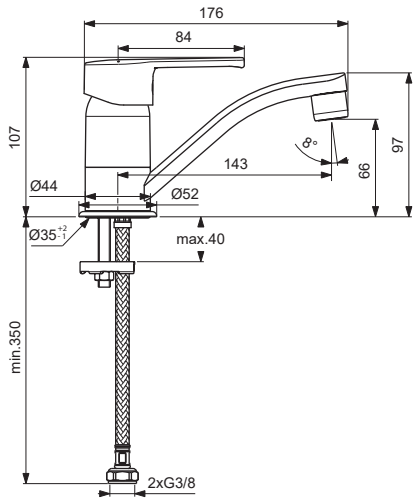

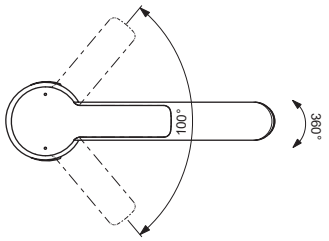

Pos.	Signify	Spare parts-Nr.	Quantity	Pos.	Signify	Spare parts-Nr.	Quantity
1	Lever,w/logo-compl.	B961239AA	1 Pcs.				
2	Cap decorative	B960473AA	1 Pcs.				
3	Escutcheon	B961211AA	1 Pcs.				
4	Screw M37x1.5	B964698NU	1 Pcs.				
5	Cartridge Ø35mm	B961477NU	1 Pcs.				
6	Sealing set	B961603NU	1 Pcs.				
7	Perlator M22x1-B	B964945AA	1 Pcs.				
8	Connecting set	B964702NU	1 Pcs.				
9	Fl.pexhose G3/8-L445mm	B960535NU	1 Pcs.				